Tractel

PART OF ALIMAK GROUP

HIGH CAPACITY RANGE 150 kg www.tractel.com





Davitrac

Davit arm for confined space entry, safe lifting solution.

Davitrac

Davit arm for confined space entry, safe lifting solution.

Davitrac is a complete anchoring solution designed for individuals weighing up to 150 kg who need to access a confined space or ensure the safe descent of an operator.
Davitrac can be used to secure an existing access point or to create a suspended access. It is also suitable for rescue operations.
Additionally, Davitrac enables lifting operations of up to 500 kg while ensuring the operator's safety.
It is compatible with a wide range of Tractel products, allowing for a multitude of configurations.

Quality:

- Easy to use.
- Compatible for suspended work.
- Lifting material: Manual or motorized.

Ergonomics:

- Easy handling / Very lightweight: less than 30kg.
- Compact / easy to transport: integrated carrying handle.
- Easy to install: installation by 1 person in less than two minutes without tools.

Security:

- Equipped with 150 kg PPE anchor points: secures 2 people simultaneously (one worker in the confined space and one worker operating the davitrac).



Foldable – easy to handle and transport.

Flexibility:

- Can be semi-permanent or permanent.
- Well suited for use as a transportable anchor point for working in confined spaces.
- Anchorage for 2 users.
- Can be used for lifting materials.
- Different type of bases.
- Modular: different combinations possible with lifting and fall arrest device Tractel products.



Technical characteristics:

- Weight: 29,7 kg (without accessories & bases).
- 2 users: 150 kg each.
- Maximum load capacity (materials): WLL 500 kg.

COMPATIBLE APPLICATIONS

- Rescue
- Confined spaces
- Rope works
- Manholes
- Pits
- Sewerod access
- Pipes
- Oil and gas
- Civil ingineering
- Industry
- Wind and solar installation

Standards

Davitrac complies with:

- **EN 795-A: 2012** (fixed anchor points)
- **EN 795-B: 2012** (transportable anchors) - when using with portable H self-stabilizing adapter
- **CEN/TS 16415: 2013-B** (Fall arrest for 2 users of 150 kg each)
- **Machine Directive 2006/42/CE** (Material lifting)

Can be used with system conform to:

- **EN 360, EN 353.2 or EN 355** (Individual protection of operators against falls)
- **EN 1496** (rescue)
- **EN 341** (descender devices)
- **Rope access directive 2001/45/CE**
- **Machine Directive 2006/42/CE** (Material lifting)

Several solutions

with Tractel product range

Scan this QR Code & find the solution suitable for your needs

https://www.tractel.com/global/products/confined-space

WLL 500 kg max



++
Permits to handle material, without height limitation



Minifor



Tirak

- **Traction and lifting hoists (Tirak, Minifor)**
- **Manual chain hoists (Tralift)**



Tralift



Stopfor KS



Derope UPA

- **Fall arresters on a flexible anchor line (Stopfor)**
- **Controlled speed descent evacuation system (Derope)**

++
For lifting material & rescue people

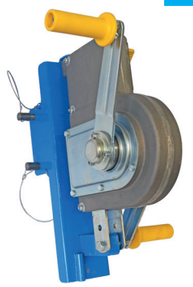

Scafor
+ bracket



Blocfor R
+ bracket

++
Perfectly suitable for rescue people

- **Automatic fall arresters with integrated winch (Blocfor R)**
- **Hand-operated wire rope hoist with stirrup adapter (Scafor)**



caRol TS
+ bracket

++
For lifting material & rescue people

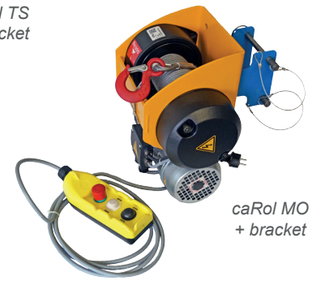

caRol MO
+ bracket

- **Manual winches (caRol TS)**
- **Motorised winches (caRol MO)**

Accessories



Trolley for Davitrac



Transport bag



Protective cap for bases

Model name	Product code
Davitrac	286819
Trolley for Davitrac	210618
Transport bag	84582
Portable H base self-stabilizing	210098
Counterweight base	221128
Counterweight kit	221138
Wall mounted adapter - Galvanised steel	210118
Clearance mural adapter - Galvanised steel	210128
Mounted floor adapter - Galvanised steel	210108
Flush floor adapter - Galvanised steel	210138
Clearance mural adapter - Stainless steel	218018
Mounted floor adapter - Stainless steel	218008
Protective cap for bases	294129

Tractel supports you in your project and offers a wide range of individual and collective protection solutions that ensure the safety of work at height operations.
Contact us for more information : www.tractel.com

Range of adapter options

offers complete versatility

Fixed bases





Flush floor adapter

- Flush adapter moulded into the concrete.
- Ideal to have no obstacles on the ground surface to prevent falls.
- Delivered with a special protection stopper, to use when Davitrac is not used/integrated on the adapter.



Mounted floor adapter

- Mounted floor adapter fixed to concrete or steel horizontal structure.
- Adapter with anchoring points to secure two persons (150 kg each) at the same time.



Wall mounted adapter

- Wall mounted adapter fixed to concrete or steel vertical structures.
- Adapter with anchoring points to secure two persons (150 kg each) at the same time.



Clearance mural adapter

- Clearance mural adapter (with 291mm offset) fixed to concrete or steel vertical structures.
- Adapter with anchoring points to secure two persons (150 kg each) at the same time.

Mobile bases



Portable H self-stabilizing adapter

Portable H self stabilizing base to be used when a fixed base can't be installed definitely. Perfect transportable solution for fall protection as well as material lifting. Its adjustable base allows it to be used for any type of standard confined access.

NEW



Counterweight base

The counterweight base allows the Davitrac jib to be installed and moved along the edge of a terrace. It is removable and lightweight, making it easy to transport. Installation requires no special tools and is quick and simple to set up.

Davitrac

Davit arm for confined space entry, safe lifting solution.

A Arm
- Rod made of aluminium.
- Lightweight materials.

B Bases
- Different types of bases: 4 fixed and 2 mobile bases.

C Anchorages
- EN 795 anchor points for fall arresters.
- Certified for fall arrest for 2 users (150 kg each) at the same time.
- Also certified for lifting material (Tirak, Minifor, Tralift...).

D 2 guided cable pulley
- As an automatic fall protection device with integrated winch for ascending or decending during a possible rescue operation or/and rescue winch.

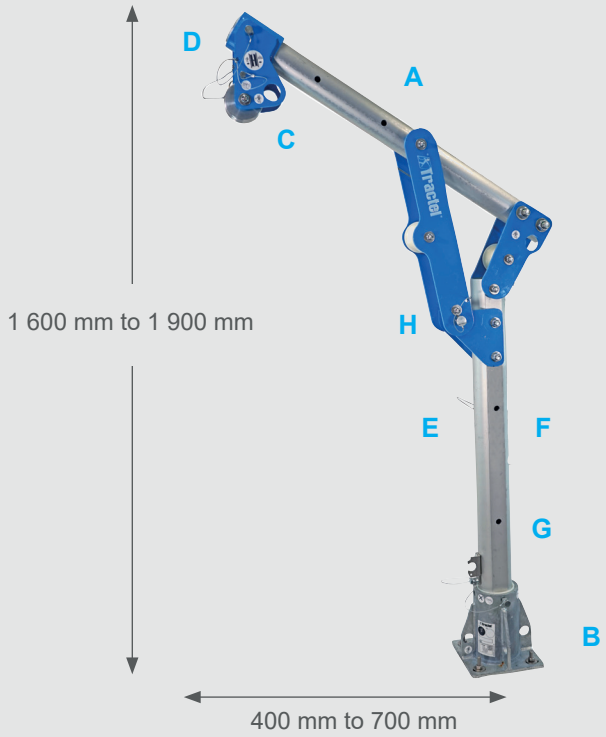

E F Option: bracket for Blocfor 20R or 30R*
- Plate for integration of an automatic fall protection device with integrated winch for ascending or decending during a possible rescue operation.

F E Option: bracket for caRol or Scafor*
- Plate for integration of a rescue winch.

G 360° rotating mast (with locking every 90°)
- Facilitates handling for material lifting and the recovery of persons.

H Quick release
- Allows the Davitrac jib to be easily folded
- Makes transportation easier.

*Both brackets can be integrated at the front or rear of the mast.



Tractel office

Tractel S.A.S.
RD 619 Saint-Hilaire-sous-Romilly
BP 38 Romilly-sur-Seine 10102 France
Tel: +33 3 25 21 07 00
E-mail: info.tsas@alimakgroup.com

www.tractel.com

235055 03 ind.02 - 09/25 - Copyright © 2025 Alimak Group. All rights reserved - non contractual document